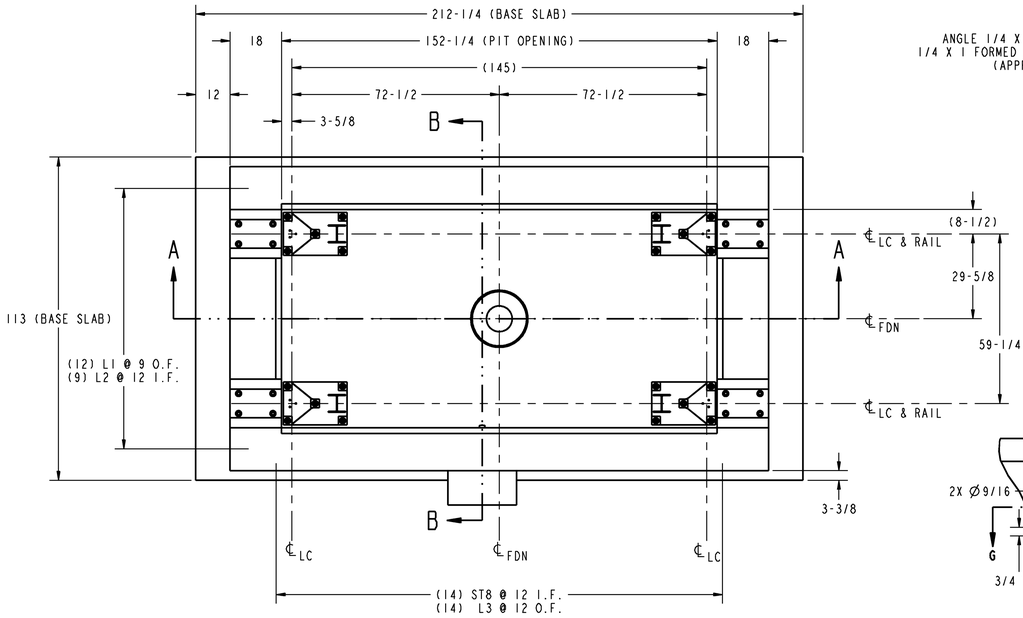

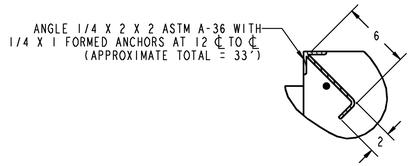

DETAIL C
SCALE 0.160

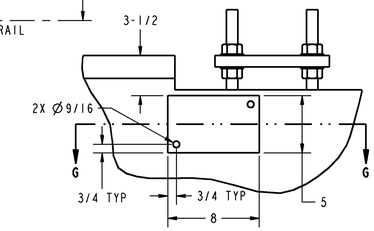

DETAIL A
TYP 4 PLACES
SCALE 0.160

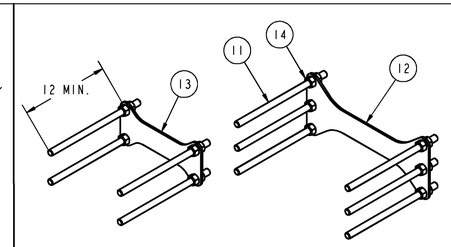

DETAIL E
(2) PLACES
SCALE 0.125

DETAIL F
(2) PLACES
SCALE 0.125

CIM FOUNDATION STEEL

NOTE: USE EMBED PLATES AS A TEMPLATE WHEN DRILLING HOLES IN THE SIDEWALL FORMS

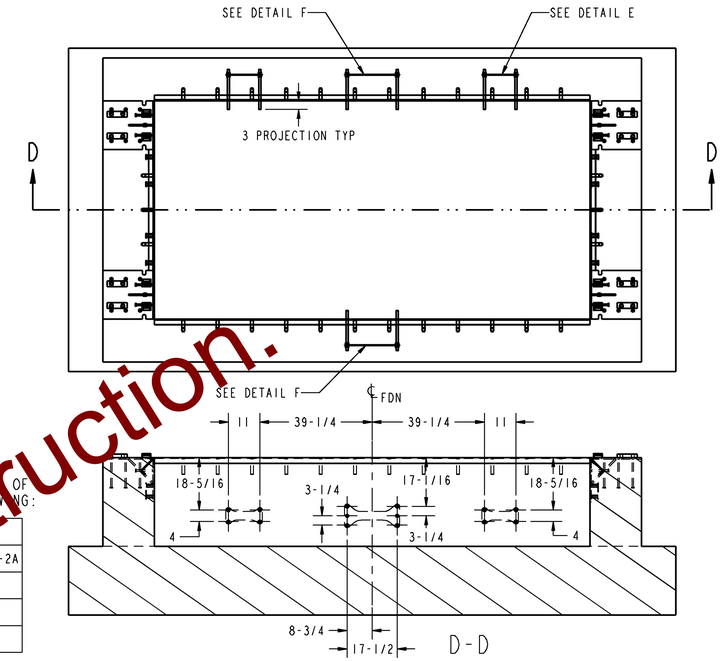

CIM FOUNDATION STEEL KOP, TC205129-2, CONSISTS OF ALL PARTS INCLUDED IN TC205129-1 AND THE FOLLOWING:

ITEM	QTY	PART NUMBER	DESCRIPTION
11	20	T20518001400	ANCHOR ROD, 3/4-10 X 14,UNC-2A
12	2	TA20518[illegible]	EMBED PLATE, LARGE
13	2	TA2051[illegible]	EMBED PLATE, SMALL
14	40	MZ0901020001[illegible]	HEX NUT, 3/4-10, UNC-2B

ADDITIONAL REQUIREMENTS FOR CIM INSTALLATIONS ONLY (SEE NOTE 10)

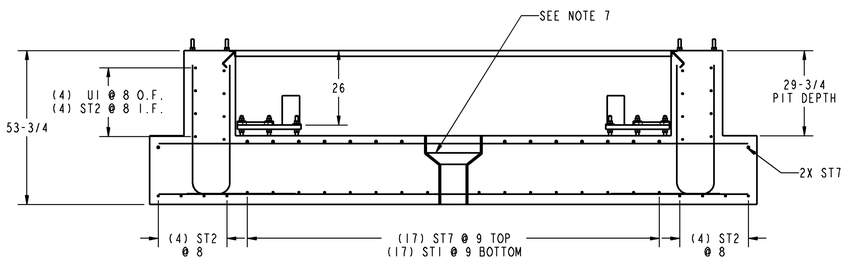

A-A

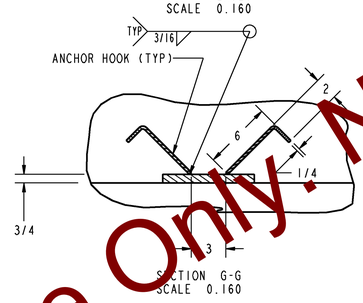

SECTION G-G
SCALE 0.160

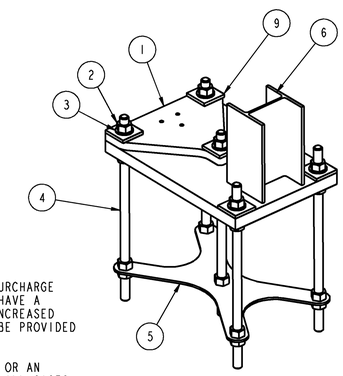

FOUNDATION STEEL

SCALE 0.125

ITEM	QTY	PART NUMBER	DESCRIPTION
9	20	TN205068	7260, CLAMP BAR, 1" ANCHORS
8	16	TC300927-26	1"-8 X 24" UNC-2A BENT ANCHOR
7	4	TN203060	7360, RR PLATE, 18"x10", #115 RAIL
6	4	TB208822	VRS241, WLDMT, BASE PLATE AND SAFETY STAND
5	4	TA205028	7260B, PLATE, X-BRACING
4	20	TC300927-25	ALL THREAD, 1-8 X 24
3	74	MZ0901030059	FLAT WASHER: 1" DIA, ZN
2	114	MZ0901020047	NUT, 1-8, HEX, GR-5, ZN
1	4	TN208820	VRS241, RECEIVER PLATE
ITEM	QTY	PART NUMBER	DESCRIPTION

FOUNDATION STEEL KOP TC208766-1

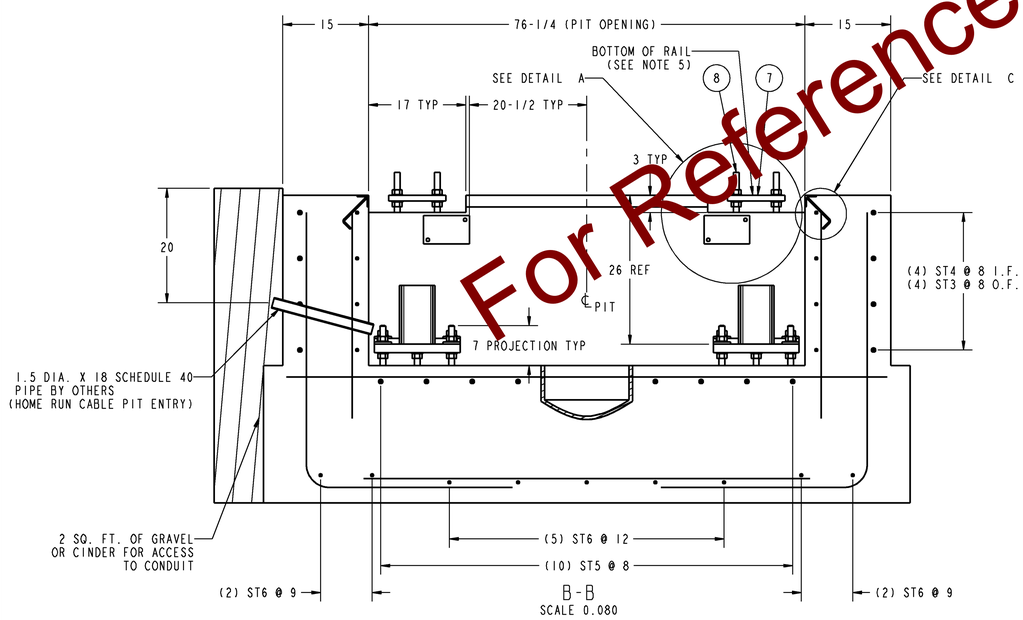

B-B
SCALE 0.080

NOTES

1. THE PIT DESIGN IS BASED ON SUPERIMPOSED SCALE LOADS; NORMAL TRUCK SURCHARGE THAT GENERATES BEARING PRESSURE OF 2500 PSF. IF THE SOIL DOES NOT HAVE A BEARING PRESSURE OF AT LEAST 4000 PSF, AND ITS CAPACITY CANNOT BE INCREASED BY DRAINAGE, STABILIZATION, OR OTHER MEANS, PILE FOUNDATIONS SHALL BE PROVIDED (BY OTHERS) PER A.A.R. (2.22.19)
2. FOR UNUSUAL SOIL OR LOADING CONDITIONS, ARCHITECTURAL REQUIREMENTS, OR AN INCREASE IN PIT DEPTH, THIS DESIGN MUST BE ALTERED ACCORDINGLY. IN ALL CASES, THE PIT BOTTOM MUST BE BELOW THE LOCAL FROST LINE.
3. INTERIOR DIAGONAL MEASUREMENTS OF PIT, ENDWALL TO ENDWALL, MUST BE EQUAL WITHIN ±1/2".
4. ALL INSIDE DIMENSIONS OF PIT AND PIERS ARE TO BE LOCATEED TRUE AND ACCURATE TO ±1/8" OF DIMENSIONS GIVEN FROM PIT CENTERLINE.
5. ALL ELEVATION DIMENSIONS MUST BE REFERENCED FROM THE APPROACH RAIL PLATES (ITEM #7). THE TOP OF THESE PLATES SHOULD BE LOCATED AT THE BOTTOM OF RAIL ELEVATION. ALL APPROACH RAIL PLATES ARE TO BE LEVEL AND IN ONE PLANE ±1/8". ALL BASEPLATE LOCATIONS TO BE LEVEL AND IN ONE PLANE ±1/8". TOP OF CURB ANGLES SHOULD BE LEVEL AND IN THE SAME PLANE AS THE ENDWALL EMBED PLATES.
6. USE 4000 PSI STRENGTH TYPE V CONCRETE AT 28 DAY AGE. IF SUBJECT TO SEVERE WEATHER CONDITIONS, USE AIR-ENTRAINING AGENT. USE MINIMUM 60 KSI YIELD DEFORMED REINFORCING STEEL. ALL CONCRETE AND REINFORCING STEEL TO BE PLACED ACCORDING TO THE BEST PRACTICE AS PRESCRIBED BY THE LATEST AREMA MANUAL, CHAPTER 8. REBAR MINIMUM DEPTH OF COVER SHOULD BE IN ACCORDANCE WITH THE LATEST ACI BUILDING CODE REQUIREMENTS FOR STRUCTURAL CONCRETE (ACI 318 - SECTION 7.7), UNLESS OTHERWISE SPECIFIED.
7. CONTRACTOR RESPONSIBLE FOR SUPPLYING EXCAVATION, CONCRETE, FORMS, CONDUIT, REINFORCING STEEL, CURB ANGLE ASSEMBLIES, RAIL, AND FLOOR DRAIN/SUMP. IF A FLOOR DRAIN IS USED, BEND ALL REBAR AROUND SUMP (DO NOT CUT).
8. APPROACH AT EACH END OF SCALE SHOULD BE STRAIGHT, IN THE SAME PLANE AS PLATFORM, AND 75 FOOT MINIMUM LENGTH, OR COMPLY WITH STATE WEIGHTS AND MEASURES REGULATIONS.
9. IF FOUNDATION IS TO BE USED FOR SINGLE DRAFT WEIGHMENTS, A SECOND CONDUIT RUN SHOULD BE INSTALLED IN THE SIDEWALL SO THAT THE INTERCONNECT CABLE MAY BE ROUTED BETWEEN THE TWO FOUNDATIONS.
10. FOR IN-MOTION APPLICATIONS, FOLLOW ALL PROCEDURES AS DESCRIBED ON THIS DRAWING FOR CONCRETE, REBAR, AND FOUNDATION STEEL, AS WELL AS THE ADDITIONAL REQUIREMENTS SHOWN IN THE UPPER RIGHT CORNER FOR CIM INSTALLATIONS.

MATERIAL SUMMARY	
CONCRETE	18 CU YD
REINFORCING STEEL	1677 LB

REINFORCING STEEL SCHEDULE (A.S.T.M. A-615 GRADE 60)

COLD FORM BARS TO INSIDE DIMENSIONS: B A B; A B

SYM	QTY	SIZE	LOCATION, DIRECTION	A	B	WGT
ST1	17	#4	FLR LOWER, LATERAL	78.00		74
ST2	16	#4	ENDWALL, I.F., LATERAL	100.00		89
ST3	8	#6	SIDE WALL, O.F., LONG.	175.00		175
ST4	8	#4	SIDE WALL, I.F., LONG.	163.00		73
ST5	10	#6	FLR UPPER, LONG.	206.00		258
ST6	9	#4	FLR LOWER, LONG.	206.00		104
ST7	19	#6	FLR UPPER, LATERAL	105.00		249
ST8	28	#6	SIDE WALL, I.F., VERTICAL	36.00		126
L1	24	#4	ENDWALL/FLR O.F.	45.00	36.00	109
L2	18	#4	ENDWALL/FLOR I.F.	45.00	15.00	60
L3	28	#6	SIDE WALL/FLR O.F.	48.00	36.00	294
U1	8	#4	ENDWALL/SIDE WALL O.F.	99.00	24.00	66

REV	CHANGE	BY	DATE

SCALE 0.040
DATE 4/16/11
DRN JLB APPD JLB

METTLER TOLEDO

TITLE
VRS241, FOUNDATION, SINGLE, 115# AREMA

UNLESS OTHERWISE SPECIFIED, ALL DIMENSIONS ARE IN INCHES, AND DIMENSIONAL TOLERANCES ARE:
FRACTIONAL ±1/16 | DECIMAL .X ±.1 .XX ±.02 .XXX ±.005 | ANGULAR X ± 1° .X ± .5°

THIS PRINT IS FURNISHED WITH THE UNDERSTANDING THAT THE ESSENCE THEREOF WILL NOT BE REPRODUCED IN WHOLE OR IN PART WITHOUT WRITTEN AUTHORIZATION OF METTLER-TOLEDO, INC. ALL DESIGNS ARE THE PROPERTY OF METTLER-TOLEDO, INC. AND WILL BE PROTECTED BY PATENTS.

TC208766 REV

For Reference Only. Not for Construction.